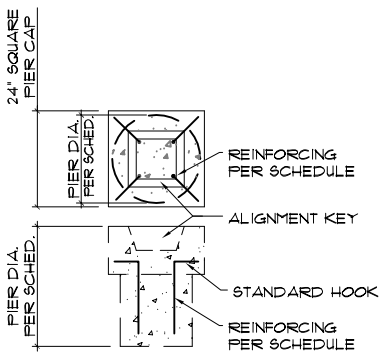

FOUNDATION PIER DETAIL

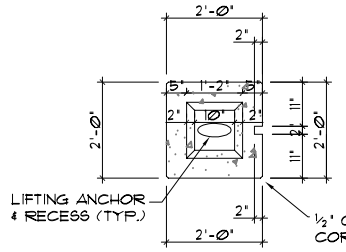

END COLUMN PLAN

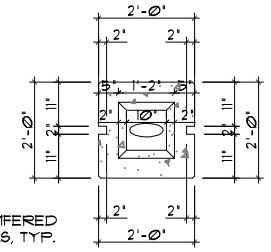

LINE COLUMN PLAN

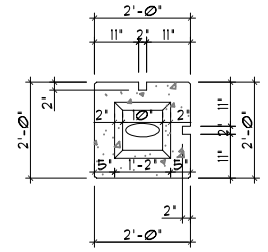

CORNER COLUMN PLAN

SCHEDULE OF RECOMMENDED FOUNDATION PIER MIN. SIZES

2' x 2' COLUMN, 8'-0" MAX. COLUMN HEIGHT

		Bedrock			Gravel			Sand			Clay			Unknown Fill / Organics
		Friction Angle, ϕ = 35° (min)			Friction Angle, ϕ = 35° (min)			Friction Angle, ϕ = 30° (min)			Friction Angle, ϕ = 0° (min)			
		Cohesion, c = 10,000 psf (min)			Cohesion, c = 0 psf (min)			Cohesion, c = 0 psf (min)			Cohesion, c = 1000 psf (min)			Poorly-Characterized
		Total Density γ_t = 125 pcf (min)			Total Density γ_t = 125 pcf (min)			Total Density γ_t = 125 pcf (min)			Total Density γ_t = 125 pcf (min)			
Exposure	Wind Speed (mph)	Pier Diameter (in)	Pier Depth (in)	Pier Steel	Pier Diameter (in)	Pier Depth (in)	Pier Steel	Pier Diameter (in)	Pier Depth (in)	Pier Steel	Pier Diameter (in)	Pier Depth (in)	Pier Steel	
B	80	24	30	4 - #5	24	48	4 - #5	32	48	4 - #5	32	30	4 - #5	REQUIRES SITE
	90	24	30	4 - #5	24	54	4 - #5	32	54	4 - #5	32	30	4 - #5	SPECIFIC
	100	24	30	4 - #5	24	54	4 - #5	32	60	4 - #5	32	30	4 - #5	ENGINEERED
C	80	24	30	4 - #5	24	54	4 - #5	32	54	4 - #5	32	30	4 - #5	FOUNDATION
	90	24	30	4 - #5	24	60	4 - #5	32	60	4 - #5	32	36	4 - #5	
	100	24	30	4 - #5	24	60	4 - #5	32	66	4 - #5	32	36	4 - #5	

Note: Foundation pier minimum length shall exceed distance required locally for frost protection.

SPECIFICATION DATA:

1. PRODUCT NAMES:

COLUMN

2. MANUFACTURER:

SIGNATURE STONE, LLC.
211 30TH STREET
GREELEY, CO 80631

3. PRODUCTS DESCRIPTION:

PRODUCTS ARE INTENDED FOR RESIDENTIAL COMMERCIAL AND INDUSTRIAL EXTERIOR FENCING, SCREENING WALLS AND NOISE BARRIERS.

4. COMPOSITION AND MATERIALS:

A MIX OF HIGH STRENGTH PORTLAND CEMENT MEETING OR EXCEEDING THE REQUIREMENTS OF ASTM-C150, NATURAL AGGREGATES, AND IRON OXIDE COLORS PLACED AND CAST WITHIN FACTORY MOLDS. FILLED MOLDS ARE VIBRATED AFTER SETUP OF MIX, CURED, AND PACKAGED FOR SHIPMENT.

5. SIZES:

FENCE COLUMNS ARE PLACED PER THE ARCHITECT. HEIGHT OF THE FENCE SYSTEM SHOULD NOT EXCEED THAT SHOWN. CONTACT MANUFACTURER FOR ENGINEERING NOT INCLUDED IN THESE SPECIFICATIONS.

6. LIMITATIONS:

FENCE SYSTEM IS DESIGNED FOR TYPICAL CONDITIONS AND APPLICATIONS. SIGNATURE STONE RECOMMENDS FENCE SYSTEM APPLICATION AND FOUNDATION INSTALLATION BE APPROVED BY LOCAL PROFESSIONAL ENGINEER ON EVERY PROJECT. FENCE SYSTEM SHOULD NOT BE USED AS AN EARTH RETENTION SYSTEM UNLESS MODIFICATIONS IN DESIGN AND CONSTRUCTION ARE DONE BY A REGISTERED PROFESSIONAL ENGINEER AND APPROVED BY THE MANUFACTURER.

7. TECHNICAL DATA FOR CONCRETE MIX:

PRE-CAST FENCE COLUMNS:
MIN. 28 DAY COMPRESSIVE STRENGTH = 4,000 psi.

CAST-IN-PLACE FOUNDATION PIERS:
MIN. 28 DAY COMPRESSIVE STRENGTH = 3,000 psi.

8. BUILDING CODES:

DESIGN OF FENCE COLUMNS, PANELS AND FOUNDATION PIERS IS BASED ON MOST RECENT VERSIONS OF UBC, IBC, AND ACI CODES.

9. INSTALLATION:

ALIGNMENT KEY TO BE CAST INTO PIER FOR BRICKSTONE AND LEDGESTONE COLUMN. THE PIER SIZE, DEPTH, AND REINFORCEMENT SHALL BE AS SPECIFIED BY LOCAL ENGINEER OR AS SHOWN IN SCHEDULE. AFTER PIER HAS REACHED SPECIFIED STRENGTH, COLUMN SEGMENT IS POSITIONED INTO ALIGNMENT KEY AND BONDED IN PLACE BY APPLYING AN ADHESIVE MORTAR CONTAINING AN ACRYLIC ADDITIVE (SONOCRETE OR EQUAL) WITH A MINIMUM BOND STRENGTH OF 150 PSI, ON ALL ADJOINING SURFACES.

10. DRAINAGE:

THE LONG-TERM PERFORMANCE OF ALL FOUNDATIONS, INCLUDING THE SIGNATURE STONE FENCE FOUNDATION, DEPENDS ON PROPER GRADING. POSITIVE DRAINAGE AWAY FROM THE FENCE FOUNDATIONS TO THE EXTENT POSSIBLE IS RECOMMENDED AT ALL TIMES. PANELS CAN BE ARRANGED TO ALLOW FOR CONTINUOUS OR INTERMITTENT DRAINAGE BENEATH THE FENCE WHERE NECESSARY.

USE MEADOW BURKE RAPID-LIFT SYSTEM, ITEM NUMBER 79URM (RECESS MEMBER) AND 79U40 (4" UTILITY ANCHOR) OR USE #3 BENT REINFORCING BAR (DETAILED BELOW) OR EQUAL.

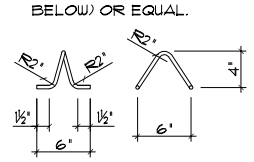

LIFTING ANCHOR AND RECESS DETAIL

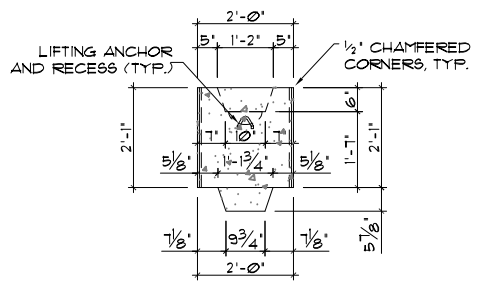

END COLUMN ELEVATION

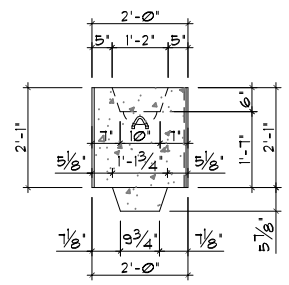

LINE COLUMN ELEVATION

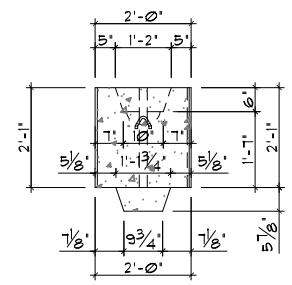

CORNER COLUMN ELEVATION

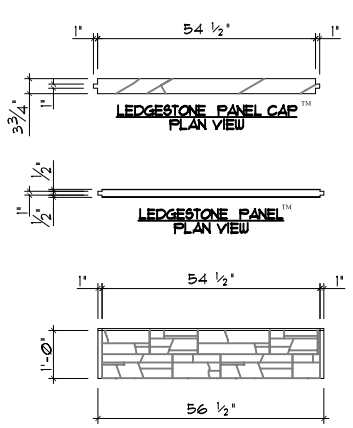

LEDGESTONE PANEL CAP™ PLAN VIEW

LEDGESTONE PANEL™ PLAN VIEW

LEDGESTONE PANEL™ ELEVATION

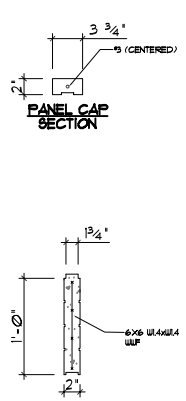

PANEL CAP SECTION

LEDGESTONE PANEL™ SECTION

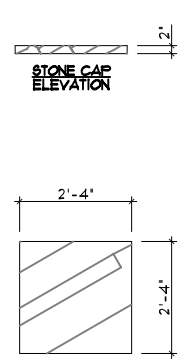

STONE CAP ELEVATION

STONE CAP PLAN VIEW

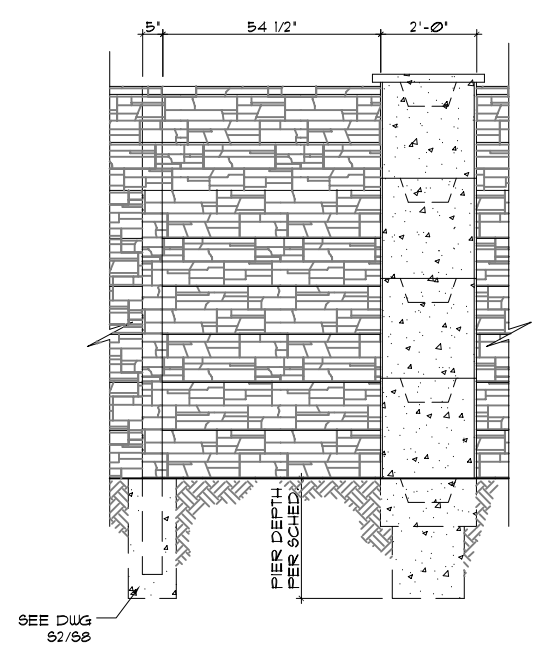

COLUMN W/ LEDGESTONE FENCE™ ELEVATION

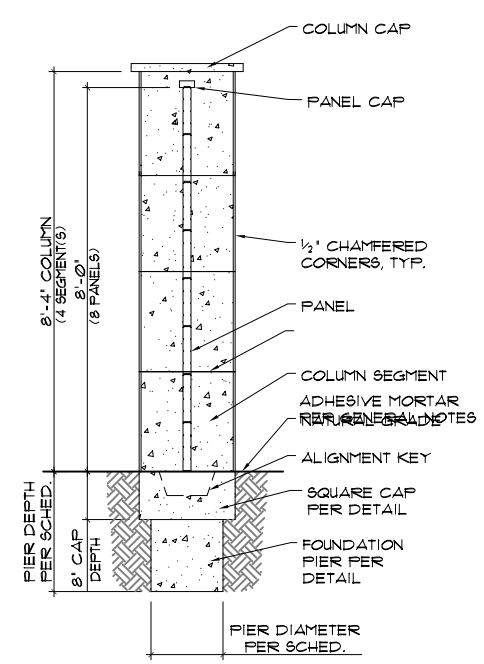

COLUMN W/ LEDGESTONE FENCE™ SECTION

NOTE: FINISH TO UNFINISHED COLUMNS TO BE SUPPLIED BY CONTRACTOR.

GENERAL NOTES:

1. ALL CONSTRUCTION TO MEET LOCAL CODES AND AMENDMENTS
2. ALL CONCRETE FOOTINGS SHALL USE TYPE II CEMENT.
3. ALL REINFORCING STEEL SHALL CONFORM TO ASTM A 615, GRADE 60.
4. ALL PIER FOUNDATIONS ARE TO BE LOCATED IN UNDISTURBED SOIL UNLESS APPROVED BY A GEOTECHNICAL ENGINEER.
5. FENCE WALL STANDARD DESIGN IS FOR A WIND LOAD OF 100 mph 3 sec. GUST.
6. APPROVAL OF THE ENGINEER IS REQUIRED WHEN FENCE IS USED UNDER A CONDITION WHERE THE SPECIFICATIONS ARE DIFFERENT THAN SHOWN.
7. THE CONTRACTOR SHALL VERIFY ALL CONDITIONS AT THE JOB SITE.
8. THE COLUMNS, PANELS AND CAPS ARE MADE OF CONCRETE AND ARE MANUFACTURED BY A NATIONAL READY MIX CONCRETE ASSOCIATION APPROVED MANUFACTURER.
9. A FULLY DIMENSIONED PLOT PLAN IS REQUIRED FOR A BUILDING PERMIT AND MUST BE PROVIDED WITH EACH STANDARD PLAN.
10. LOCATION AND FENCE HEIGHT SHALL COMPLY WITH CITY/COUNTY FENCING CODES AND CURRENT CONDITIONS.
11. ALL WORK SHALL COMPLY WITH CITY/COUNTY GRADING ORDINANCES.
12. ADHESIVE MORTAR SHALL HAVE MIN. TENSILE STRENGTH OF 300 psi. CONTRACTOR SHALL COMPLETELY COAT ADJOINING SURFACES OF COLUMN SEGMENTS.

NOTE: ALL DIMENSIONS SHOWN ON THIS SHEET ARE FOR INFORMATION PURPOSES ONLY. ACTUAL DIMENSIONS MAY VARY DUE TO MANUFACTURING AND MOLDING TOLERANCES.

THESE DRAWINGS AND ACCOMPANYING SPECIFICATIONS,AS INSTRUMENTS OF SERVICE ARE THE EXCLUSIVE PROPERTY OF THE ENGINEER AND THEIR USE AND PUBLICATION SHALL BE RESTRICTED TO THE ORIGINAL SITE FOR WHICH THEY WERE PREPARED. REUSE, REPRODUCTION OR PUBLICATION BY ANY METHOD IN WHOLE OR IN PART IS PROHIBITED EXCEPT BY WRITTEN PERMISSION FROM THE ENGINEER. TITLE TO THESE PLANS AND SPECIFICATIONS SHALL REMAIN WITH THE ENGINEER WITHOUT PREJUDICE, AND VISUAL CONTACT WITH THEM SHALL CONSTITUTE PRIMA FACIE EVIDENCE OF ACCEPTANCE OF THESE RESTRICTIONS.
COPYRIGHT
CTL | THOMPSON STRUCTURAL ENGINEERS, LLC. ALL RIGHTS RESERVED.

PLAN NOT VALID WITHOUT ORIGINAL WET STAMP.

CTL | THOMPSON
STRUCTURAL ENGINEERS
FORMERLY SECURE FOUNDATIONS, LLC
CTL | THOMPSON STRUCTURAL ENGINEERS FT COLLINS, LLC
351 Linden Street, Ste 140, Fort Collins, CO 80524
P: 970-206-9455
F: 970-206-9441

SIGNATURE STONE 8' FENCE SYSTEM™

NO.	DATE	REVISION/ISSUE
1		
2		
3		
4		

CLIENT:
SIGNATURE STONE
211 W. 30TH STREET
GREELEY, CO 80631

GREG MILLER
970-351-0270

DESIGN/CHK: HAP/WMK	SHEET S6
DRAWN: TTS	
PROJECT #: SF01227	OF S8
DATE: 6/22/06	
SCALE: AS SHOWN	